GREGORY G. MONKS

Architectural Symbolism and Non-verbal Communication at Upper Fort Garry

ABSTRACT

The archival research component of the Upper Fort Garry Archaeological Project recovered extensive detailed information on the architectural history of the fort. It quickly became clear that the changes in architecture during the fort's occupancy (1836–1881) corresponded closely to economic and social changes in the Red River Settlement at large. Built by the Hudson's Bay Company to house its administrative elite in North America, the fort played a central role, both physically and conceptually, in the life of the settlement. This article takes a non-verbal communication approach to the fort and examines it as a set of architectural symbols by means of which the Hudson's Bay Company established and maintained its dominant position in economic and social relations with its employees and with settlers.

Introduction

This article discusses the relationship between changes that occurred over time in the architecture of Upper Fort Garry and the role of the fort within the Red River Settlement. Upper Fort Garry was home to the Hudson's Bay Company and its top-level employees, and it was the administrative center of the Red River Settlement and the Northern Department between 1836 and 1882. The fort grew in size and complexity, and it underwent a major reorientation, not only in conjunction with changes in the settlement and as a result of internal operating requirements, but also, as will be argued here, as a result of the Company's effort to express and continually reinforce by means of architectural symbolism its dominant economic and social position within the settlement. This article assumes that economic competition between individuals and groups is a major causative agent of cultural evolution. It follows that individuals and groups use various devices to maintain or increase their competitive advantage. One such device is display, including those aspects of the built environment over which individuals or groups have control. Upper Fort Garry provides an opportunity to examine from a diachronic perspective the symbolic role of architectural form and space in competitive relationships between economic and social groups. This examination also provides an opportunity to evaluate what McGuire and Schiffer (1983:283) describe as a lag effect between changes in social inequality and changes in architectural design.

Other archaeologists have dealt with related topics (cf. Leone 1982). Deetz (1977) has identified Medieval and Georgian mindsets in the material culture, including architecture, of colonial New England. Leone (1973, 1977) has shown the relationship between the temporal and spiritual world in the Mormon organization of architectural and settlement space. Similarly, Fritz was able to relate architecture and settlement patterns to implicit ideational principles at both Chaco Canyon (Fritz 1978) and Vijayanagara (Fritz 1987). Murray (1985) has shown how the North West Mounted Police outpost of Fort Walsh expressed the imperial domination of English, Protestant Ontario over other groups then in Confederation and over frontier regions that later joined Canada. Culpin and Borjes (1981) argued that the architecture of Fort Union performed the same function of symbolic dominance. Architecture is particularly useful in the study of culturally created environments because some form of physical shelter is a universal human artifact, and the type of shelter, its internal organization, and its position in relation to other phenomena within and outside the site provide information on the organizational rules and the perception of reality that underlie the creation and use of these artifacts. As McGuire and Schiffer (1983: 280) note, the goal of architecture is to express both utilitarian and symbolic functions.

Conceptual Framework

A recent synthesis of studies of the built environment identified three approaches to the study of

its meaning: semiotic, symbolic, and non-verbal (Rapoport 1982:36–55). The non-verbal approach was favored due to its emphasis on meaning and its pragmatic emphasis on visual cues. It also was thought to provide a basis for understanding symbolic communication (Rapoport 1982:52). The analysis of Upper Fort Garry centers on architectural symbolism and uses archival illustrations and documents to reveal the non-verbal cues upon which inferences about the cultural messages encoded in the fort's architecture are made (cf. Rapoport 1982:48–51). These inferences are based on the writings of some Red River settlers, and they provide the inferential basis for bridging arguments that connect architectural symbols with culturally meaningful messages. These symbols are discussed below in terms of what Rapoport (1982: 88–89) terms fixed and semi-fixed feature elements.

Fixed feature elements—e.g., walls, ceilings, floors, buildings, and streets—communicate meaning, especially in traditional cultures, according to their size, location, sequence, and arrangement (Rapoport 1982:88–89). Alexander Ross, who in 1852 published his observations of the Red River Settlement, made the following observations about buildings and the people occupying them. In the early days of the settlement, houses were humble one or two room wooden—i.e., log—buildings about 20–30 ft. long and costing about £20. A "superior class of dwelling," such as the one in which Ross lived, was 40–60 ft. long; rested on a stone foundation; had windows, doors, a shingled roof, and painted interior walls; and was coated with lime on the outside. Such a house cost £300. Shortly before the time of his writing, two-story houses appeared, and the "luxury" of glass windows and outer door locks became fashionable and widespread for the first time. Building with stone and lime also first appeared in 1830 (Ross 1957:140–141). By the late 1860s, two-story houses outside Upper Fort Garry were still not common (Hargrave 1977:196). Houses were reported to have been made of different woods. Oak was used for the exterior walls, pine for the floors, and basswood for furniture. Oak and cedar were used for shingles, although the latter was rarer. Most people used straw thatch, how which was light, waterproof, and durable (1957:388). "Squatters," i.e., Métis, almos variably built one-room log huts which were plete disorganization inside. The better ones two rooms. In contrast, "Canadians of any st ing" kept their houses neat. Scots settlers live warm, comfortable houses (Ross 1957:195, 1

Observations beginning in 1861 by J. J. grave depict a similar scene and a similar se attitudes. Houses in the Métis settlements w described as "mere huts consisting of one chan each, lighted by a single window, but from tim time we passed one of more pretentions . . (Hargrave 1977:67). A further description not

> One of the most characteristic features of the colony is evanescent nature of its dwelling houses, which seem resemble in that respect the lodges of the savages, rem able from day to day and leaving no trace behind. material used for building is wood, and the majority of houses inhabited by the poorer classes have only one or rooms (Hargrave 1977:180).

Construction was of a primitive nature, most h being built of unseasoned wood that opened crac in walls, floors, and partitions. Even residences the comparatively prosperous often lacked ba comforts (Hargrave 1977:468). St. Boniface cath dral and the Bishop's residence were rebuilt stone after the 1860 fire, and some of the wealthi residences in the settlement were also built stone. The problem with this material, howeve was the inability to provide it with a proper fou dation, thus necessitating constant repair to avo the ravages of a constantly moving sedimentar soil (Hargrave 1977:180). Houses in the heart the Scottish settlement are described as numerou generally small, and interspersed with occasion comfortable, roomy dwellings. At St. Andrew's near Lower Fort Garry, houses were closely clus tered and whitewashed, and even closer to the for there were some very comfortable private house that were home to some of the settlement's wealth ier residents (Hargrave 1977:191–192).

Another means of display may occur throug manipulation of semi-fixed features. These features include furniture, curtains, plants, and gar-

den layouts and are more subject than fixed feature elements to a phenomenon known as "personalization" Rapoport (1982:22, 89). Personalization, and variations in it, establishes and expresses cultural meaning, group identity, and status because symbolism—i.e., meaning—is central to all environments and because meaning is culturally specific and hence culturally variable (Rapoport 1982: 21, 44–48). The Bachelor's Hall at Upper Fort Garry contained a large room that was the main public room of the fort. Opening off this room were a number of private rooms. Within it stood a wooden table with assorted newspapers, and broad plugs of Cavendish (pipe tobacco) in the corner, while a low sofa and chairs were scattered around the room (Hargrave 1977:186). Company officers, who would use shipping crates for furniture while travelling, would be able to avail themselves of all the conveniences of civilization when they were at Upper Fort Garry. These conveniences included peculiarities of individual taste that were most often expressed in the bedroom. While most men made do with the basics, some adorned their rooms with ornamental items such as masks, guns, shot, flasks, powder horns, fire bags, and native and European art (Hargrave 1977:195). Books and musical instruments, sometimes including pianos, were also found in fur trade posts (Hargrave 1977: 195). Gardening, another form of personalization, was an activity only of the wealthy in the late 1860s, and even then, exotic plants were scarce (Hargrave 1977:467).

Literate British males who observed the fixed and semi-fixed feature elements of Red River Settlement architecture appear to have perceived the symbols that were embodied in buildings and to have understood implicitly their meanings. Thus Ross (1957:142–143) used terms like "commodious," "these splendid establishments," and "its gay and imposing appearance" in describing Upper Fort Garry and the buildings in it, and he notes that the stone houses of the Scots settlers are "handsome" and indicative of prosperity. By contrast, Hargrave (1977:180) observed that "the poorer classes" inhabited one- or two-room wooden dwellings. The built environment, both fixed and semi-fixed feature elements, contained recognizable symbols with clear cultural meaning. But Rapoport (1982:81) states that built environments are culture-specific, so that decoding them depends on knowledge of the relevant cultural schemata. Further, he states that conflicts can arise in pluralistic contexts when the same environmental cues elicit different meanings and behaviors (Rapoport 1982:64). Given that there were different ethnic and religious groups within Red River society and that this diversity grew over time, were the symbolic messages encoded in Upper Fort Garry equally intelligible to members of all groups? While there is no documentation that helps directly to answer this question, it is likely that those groups from Britain, France, Upper Canada, and Lower Canada easily understood the visual cues encoded in the fort because of their shared Norman/Anglo-Saxon medieval tradition. The mixed-bloods and the Métis probably learned to recognize and interpret the correct visual cues from their British or French parents, but even if this were not so, their day-to-day contact with the Hudson's Bay Company (HBC) and North West Company (NWC) would have provided them with the correct interpretive schemata. Likewise, the aboriginal population, accustomed to interacting with Europeans within this kind of architectural context since 1670 on the shores of Hudson's Bay and since 1736 in the Red/Assiniboine region, also would have learned the basic cultural schemata. Not all groups were equally inclined to accept the messages that the fort was intended to communicate, as historical events showed, but their intended meaning was likely well understood by all target audiences. The present analysis of those symbols and their meaning attempts to go beyond the limited historical documentation and recreate an internally consistent system of symbols and meanings, based on historical illustrations and documents, that is thought to have been more or less shared by all occupants of the Red River Settlement.

Historical Background

The Red River Settlement grew up around the junction of the Red and Assiniboine Rivers, known

FIGURE 1. Map of Canada showing selected rivers and fur trade forts.

as the Forks (cf. Morton 1957; Ross 1957; Guinn 1980). Control over this strategic transportation junction was critical to the western fur trade for two reasons. First, pemmican made on the northern plains and used as a dietary staple by the fur brigades that serviced the trading posts of the North Saskatchewan River and the northern boreal forest had to pass through it. Second, both companies used the Forks as a critical part of their operations. The NWC moved its trade goods to the North Saskatchewan River from Montreal via Fort William, and the HBC established an agricultural colony at the Forks (Figure 1). During the period of intense fur trade competition between the HBC and the NWC (ca. 1767–1821), the tactic of interrupting each other's trade and supply routes was employed, resulting in the construction at the Forks of Fort Gibraltar I in 1810 by the NWC and the establishment of the agricultural Selkirk Settlement, centered around Fort Douglas, by the HBC in 1811 (Figure 2). Not only did each Company threaten the other's pemmican supply, but the HBC also gained the double advantage of, first, cutting its food supply costs through local agricultural production, although crop failures were frequent; and, second, placing a major obstacle across the main NWC supply route between Fort William on Lake Superior and the North Saskatchewan River (Figure 1). The HBC's advantage was mixed, though, for it recognized that the settlement would ultimately be in conflict with its own fur trade interests (Provincial Archives of Manitoba [PAM] 1822; Morton 1957:68; Livermore 1976:71; Pannekoek 1987:5). In 1816 the HBC-sponsored settlers seized Fort Gibraltar I, dismantled much of it, and razed the rest; a large mounted

FIGURE 2. Map of the Red River Settlement showing the Red and Assiniboine Rivers, major building complexes, and selected parishes.

force, principally Métis who worked with and for the NWC, retaliated by killing 21 settlers at Seven Oaks and taking over Fort Douglas. Hostilities cooled enough that in 1817 Fort Douglas was returned to HBC control at the same time as the new Fort Gibraltar II was built at the Forks. The HBC and NWC merged under the former name in 1821, restoring the fur trading monopoly, originally granted by Prince Rupert in 1670, over northern North America east of the Rocky Mountains. Fort Gibraltar II was renamed Fort Garry and became the seat of HBC governance.

The Red River Settlement, slow to become established at first, began to grow in size and complexity. In addition to the original Scottish Presbyterian farmers, HBC "servants," as employees were called, were permitted to retire to the settlement between 1821 and 1825 (Livermore 1976:74, 163). With them they brought their Native wives and mixed-blood children whom they had formerly been forced to abandon when they were sent back to Britain at the expiration of their employment contracts (Van Kirk 1980:48). Thus English and Scottish, Presbyterian and Anglican, traders, clerks, tripmen, laborers, and artisans began to settle at Red River. Another new segment of the settlement's population resulting from layoffs was the French Canadians and Métis (mixed Native and French Canadian) Roman Catholics who had worked for the NWC. They and their wives and children had less to do with agriculture than with wage labor, fishing, and hunting for pemmican production (Hargrave 1977:466; Pannekoek 1987: 19).

The HBC merger with the NWC meant that by 1831 English Anglicans were the economic and social elite of the settlement (Van Kirk 1980:204, 218). Scottish Presbyterians could and did achieve high office in the HBC, but they never controlled it. English-speaking mixed-bloods, both Anglican and Presbyterian, enjoyed relatively good economic and social prospects for a time (Judd 1980: 311–312). The males sometimes followed their fathers in the Company's service, and their sisters were frequently married to traders and Company officials (Livermore 1976:107–108, 167–184; Van Kirk 1980:160; Brown 1980:77). French-speaking Catholics, both Canadian and Métis, were placed low in the settlement's hierarchy. This placement stemmed from several factors: the traditional English–French rivalry in Europe; the English–French colonial rivalry in North America; the HBC–NWC fur trade rivalry; and the memory of the Seven Oaks killings. Thus approximately half the Red River Settlement population was placed in an inferior economic and social position early in the settlement's history. Natives formed the bottom of the hierarchy almost immediately. Their services were no longer needed as the settlement grew less and less directly involved in the day-to-day trade for furs (Livermore 1976:167; Judd 1980:307).

Economic and social differentiation within this hierarchy became greater over time. In 1831, George Simpson, the overseas Governor of the HBC, and John G. McTavish, the Chief Factor of Moose Factory, returned to the settlement with their new English brides. This act, along with Simpson's jettisoning of Margaret Taylor—the longest lasting of his mixed-blood consorts—and their two sons, was an example that was quickly followed by other members of the elite (Van Kirk 1980:200). Further, the English lifestyle that accompanied these new brides served to emphasize the eco-

nomic and social differences that were already in place. English-speaking mixed-bloods saw their status diminish. Women were "turned off," i.e., passed on to another man of their own kind, by their husbands who could afford English wives. Brown (1980) and Van Kirk (1980) provide extended discussions of the roles of women in the fur trade. Mixed-blood males were restricted in their vertical mobility within the HBC (Judd 1980:312). The Métis were even further reduced in economic and social position because of their genetic and cultural background.

Also in 1831 a new headquarters was built by the HBC. Named Lower Fort Garry because of its location 20 miles downstream from the Forks, it boasted the first stone dwelling house in the settlement and was surrounded in 1839 by a stone wall that was intended to: (1) relocate the center of the Red River Settlement away from the Forks, (2) facilitate the ease of water transport between the Red River Settlement and Norway House, (3) provide protection from heavy floods such as the one that had severely damaged Fort Garry in 1826, and (4) provide protection against attack from the Métis or from the Americans (Watson 1928:3; Ross 1957:141). Although its defensive capabilities were never tested, it was safe from high water. And while it succeeded in facilitating water transport in the North, it quickly failed as the new hub of the settlement.

In response to the inertia of economic and social life centered at the Forks, the HBC began construction of Upper Fort Garry in 1835 (cf. Loewen and Monks 1986, 1988). Situated on the highest available land at the Red–Assiniboine junction, the fort housed the Company's administrative offices and officers. From here, the HBC governed not only the Red River Settlement but the entire Northern Department.

Unrest born of economic distress was a major agent of change in the Red River Settlement. Trading in furs was an exclusive prerogative of the HBC and was rigidly enforced. Agriculture was unsuccessful more times than not due to inexperience on the settlers' parts and to plant and animal domesticates that were not adapted to local conditions. When crops were good, there was no market except the HBC. The Métis hunters who produced pemmican were similarly affected because of the unpredictable bison herd movements and because the HBC was again their only market. Often, either agriculture or the hunt was successful in any given year, which tended to keep prices paid by the HBC up. The greatest irony arose when both pursuits were successful in the same year, because this caused prices paid by the HBC to fall sharply (Ross 1957:335). The only manufacture from the settlement, Red River cloth, was coarse and inferior, and it could not profitably be exported to Europe, the lower St. Lawrence area, or the United States. "Buffalo" robes were a profitable export after 1850, but by then most of the animals had been exterminated so the advantage was short-lived.

In 1846 a detachment of 347 troops, principally the Sixth Regiment of Foot, was sent from England to the settlement. Ostensibly to protect the settlement from Americans during the Oregon Boundary Dispute, an event which was settled several days before the troops left for North America, the garrison was in fact requested by the HBC to preserve order in the Red River Settlement. Half the garrison was quartered at Lower Fort Garry while the remainder, including the commanding officers, was housed at Upper Fort Garry. This latter fort, built in 1836 and also made of stone, was located on the highest ground at the Forks and housed the HBC elite. The garrison lasted from 1846 until 1848 and preserved the peace more by providing a larger market for the settlement's products than by military force. When they left, a replacement militia of Chelsea Pensioners was unable to control the unrest that resurfaced.

In 1849, through bad judgment on the HBC's part, Guillaume Sayer and three other Métis were charged with illegally trading their furs to the Americans rather than to the HBC. They, like many other Métis, had taken opportunities where they found them (Ross 1957:336), a common phenomenon among economically and socially disadvantaged groups (Cross 1970:184–185). Sayer was found guilty, but no sentence was imposed because there were 377 guns in the Métis crowd waiting outside the courthouse (Ross 1957: 374).

From that point onwards, the HBC monopoly in trading furs was broken.

Private commercialism, including furs, continued to grow in the 1850s, but access to major markets was still restricted. Either the HBC's traditional route through Norway House and York Factory, or the newly developing cart traffic with St. Paul were the only two major ways of bringing goods to and from the settlement. The HBC controlled the former route, and the Métis and Americans dominated the latter. Despite the arrival of the railhead at Rock Island on the Mississippi in 1854 and the establishment of steamboat contact between St. Paul and the Red River Settlement in 1859, it was still judged necessary by the HBC to request a garrison of the Royal Canadian Rifles from Ontario between 1857 and 1861. Like the Sixth Regiment, they were housed at Upper Fort Garry, which had been doubled in size in 1853, and they provided an enlarged market for settlers' products. Further, they re-emphasized the HBC control of the settlement, and they signalled English Anglican support of the HBC from Ontario.

Canadian confederation occurred in 1867, and the elite of the Red River Settlement quickly clamored for union with it. The largest opposing faction was the Métis, still half of the Red River Settlement population (Morton 1957:91; Hargrave 1977: 174). They feared alienation from what they regarded, on the basis of their Native ancestry, as their traditional lands (Morton 1957:115–116). The Riel Rebellion of 1869 saw the Métis capture Upper Fort Garry, but they later withdrew at the advance of an expeditionary force from Ontario. Many of the Métis were subsequently dispossessed of their lands, as they had feared. Many moved to Saskatchewan after Manitoba joined Confederation in 1870, as a stream of farmers, entrepreneurs, artisans, and speculators moved to the Red River Settlement from southern Ontario. The HBC soon lost its position of economic and social influence as the population quickly grew and as new capital and attitudes flowed into the settlement. The Company ceded its Charter to Canada in 1869, Manitoba entered Canadian Confederation in 1870. The City of Winnipeg was incorporated in 1874, and the Canadian Pacific Railway link to Ontario, promised as a condition of Manitoba's entry into confederation, reached the city in 1881. No longer an isolated colony based on the fur trade, the Red River Settlement had grown into Canada's westernmost city and its gateway to the plains.

Analysis of Upper Fort Garry

The archival data on which the following analyses and interpretations are based derive from a thorough inspection of written and pictorial documents concerning the architectural history at Upper Fort Garry. These documents were examined in the Hudson's Bay Company Archives (Winnipeg), the Provincial Archives of Manitoba (Winnipeg), the Public Archives of Canada (Ottawa), and the Public Records Office (Kew, England). These data are set out in detail in Loewen and Monks (1986) and are partially summarized in Loewen and Monks (1988). The archaeological data incorporated in this article derive from excavations of the southwest corner of the fort that were conducted by the author in 1981, 1982, and 1983 (Monks 1982, 1983, 1984). Published works dealing with the fort, the settlement, and the fur trade were also widely consulted, as noted in the bibliographic references throughout the paper.

Pictorial data consisted of scale plans, sketch plans, illustrations, and photographs. These data vary in their accuracy and completeness (Loewen and Monks 1988:2). There is, nevertheless, a core of accurate and reliable illustrations of the fort that provide the basis for the figures that accompany this article. Pictorial data do not speak for themselves; rather, they provide the observer with visual cues that must be interpreted. Written historical documents and published works on the history of the fort and the settlement provide guidelines with varying degrees of reliability for interpreting the visual cues. Generally speaking, the greater the degree of contemporaneity between the illustrations and the written documents, the greater the degree of likelihood that interpretations of the former based on the latter are reliable.

Notwithstanding a concerted effort to examine all the available documents on the fort's architec-

ture, there are still obvious gaps in the historical record. These gaps arise primarily from an absence of documents covering certain periods of the fort's existence, and gaps in the pictorial record do not necessarily coincide with gaps in the documentary record. In the published historical accounts of the period, bias of the writers, principally elite white senior males, also plays an important role in what information is and is not communicated (Livermore 1976:192; Judd 1980:311).

External Communication: Form

Some fundamental questions arise in the context of external communication: Why was Upper Fort Garry constructed as a fort in the first place? Why was it constructed in its particular form? Why was it expanded in 1852–1853? And, at which target audience(s) was it directed? If the concept of nonverbal communication applies here, and if economic and social competition was the major causative agent in the settlement's evolution, one would expect to find an initial architectural condition that emphasized the HBC's dominant position as founder and sponsor of the settlement. Further, one would expect to find architectural changes through time that attempted to maintain that position at critical junctures in the settlement's history.

The original forts in the area had been constructed during a period of fur trade rivalry, sometimes intense, and they had been true defensive forts. They had also been constructed of wood. By 1836 when Upper Fort Garry was built, there was no organizational rivalry in the fur trade and no political threat from either the east or the south. Why, then, was a fort constructed at all, let alone one of stone? One possibility is British eccentricity: after all, they had built Fort Prince of Wales of stone a hundred years earlier. Indeed, the limestone from which both Upper and Lower Forts Garry were built was available at the latter site and was judged to be cheaper than wood (Watson 1928:3). Unlike Upper Fort Garry, though, Fort Prince of Wales was built during a period of conflict between England and France. Both forts, on the other hand, were shoddily constructed; the latter crumbled under La Pérouse's attack, and the former was deemed unfit to defend against artillery attack (Public Records Office [PRO] 1846b; Hudson's Bay Company Archives [HBCA] 1848). Indeed, by the 1870s portions of Upper Fort Garry's walls were crumbling and were replaced by wooden palings.

It is also reasonable to suggest that the stone fort construction resulted from a desire to provide shelter against damaging floods. The damage to Fort Garry by the 1826 flood had been a powerful object lesson, and the construction of Lower Fort Garry on one of the highest points along the Red River certainly lends support to the suggestion. On the other hand, what advantages do bastions provide against flooding at either Upper or Lower Fort Garry? Why would one require an elevated walkway around the entire interior of Upper Fort Garry's walls? Why would one construct walls with rifle ports at Lower Fort Garry? And why would one build bastions with cannon ports at Upper Fort Garry if flooding were the prime concern? The anti-flooding notion awaits further support.

In truth, both Lower and Upper Forts Garry were built as a signal by the HBC to the settlers that any attempt to upset the economic and social order could and would be resisted by force. This argument accounts for the permanence signalled by stone walls, bastions with cannon ports, interior gallery, and, at Lower Fort Garry, rifle ports in the walls. It also accounts for the presence of two military garrisons within the forts (1846–1848 and 1857–1861) and the prohibition of public access to most of the interior of Upper Fort Garry during the 1846–1848 garrison. Indeed, the site at which Upper Fort Garry was located had the dual advantages of defensibility in the event of conflict and accessibility for commercialism (Ross 1957:142). The suggestion that the walls were meant to communicate dominance also receives support. Archaeological evidence from Upper Fort Garry indicates that walls were placed on foundations 50 cm thick, whereas the wooden fur warehouse inside the southwest corner of the fort was placed on stone foundations 1 m thick (Monks 1984:35). Like Fort Walsh, the exterior walls at Upper Fort Garry and a number of other fur trade posts were largely for

show, and they often collapsed (Pannekoek 1987: 15). The sturdiness of the fur warehouse foundations at the Upper Fort reveals where the HBC's true priorities lay. No explanation can be offered, however, for the fact that the wall foundations at Lower Fort Garry were 1 m thick.

But who was a threat to the HBC? Certainly it was not the retired HBC employees nor their wives, nor their mixed-blood offspring. Indeed these Englishmen and Scotsmen worked hard to find positions for their sons with the Company and to marry their daughters to Company officers (Van Kirk 1980:160). Neither was it likely that the Selkirk settlers posed a threat to their original patron. The threat of attack by the Sioux must be considered because the Assiniboine River is reported to have marked the southern limit of Cree and Assiniboine territory and the northern limit of Sioux incursion (Guinn 1980:15–25), but large-scale confrontation between Europeans and Sioux in the Forks area is not recorded. Indeed, the HBC took great pains to remain on good terms with Native groups who were the primary producers of furs. The groups with whom the HBC and the Selkirk settlers had historically experienced poor relations were the NWC and the Métis. Watson (1928:3) states that fear of attack by Métis or Americans lay behind the choice of location for Lower Fort Garry. A reading of contemporary documents (Gunn and Tuttle 1880; Ross 1957; Hargrave 1977) leaves the impression that relations with the Americans were less worrisome than those with the Métis, even during the Oregon Boundary Dispute. After 1821, the Métis portion of the Red River Settlement population was economically, socially, and religiously opposed to the HBC, at least in the HBC's perception if not in actual fact, and this situation endured until the 1870s. The construction of Upper Fort Garry was one of the HBC responses to this adversarial relationship. It is worth noting the chronology of these events. Stone and the technology to work it had always been available to the HBC and the NWC, but only in 1830, after the emergence of a sedentary Métis population, did the HBC begin to employ this material and technology (Ross 1957:141). Note, too, that the stone wall surrounding Lower Fort Garry was built after the start of Upper Fort Garry's construction at a time when relations between the Métis and the HBC were deteriorating.

An examination of the changes in external architecture through time reveals several other notable events. In 1853, an expansion that doubled the fort area was begun. In 1871 the southeast corner of the fort was altered to allow external access to the retail and liquor stores. Finally, in 1882 the fort was dismantled. Was the 1853 expansion the result of flood damage? There is no evidence to support such a position; in fact, the maximum floodwater depth in the fort compound was knee-deep, and permanent damage was minimal (Guinn 1980:86–87). Was it to accommodate the growth in business experienced by the Company, as is so often assumed? It is true that two large storehouses had been built outside the fort between 1846 and 1848, and plans had been made to enclose them, but they were not carried out until 1853 (Guinn 1980:87–88). Further, by 1857 very little use was being made of the new area enclosed by the walls except for the presence of the two existing storehouses and a new residential building for the Governor of Assiniboia. There seems to be no compelling reason for the fort to have been expanded at this time.

If one interprets the site through a theory of non-verbal communication, a different picture emerges. The poor economic conditions in the settlement during the 1840s, and the result of the Sayer trial on 17 May 1849 (Ross 1957:372–373), had caused the HBC's position in the settlement to be threatened. In this context, the doubling in size of Upper Fort Garry, with the inclusion of an elaborate stone gateway, is seen as yet another effort on the Company's part to reassert its dominant position at Red River. This extension of the Fort, it should be noted, was decided upon in June 1849 (Loewen and Monks 1986:98, 100), even though the plans were not executed until after the 1852 flood. There were no bastions, no interior walkway, and no military inclusions in the expansion, and the enclosure was made of double walls of squared oak timbers separated by rubble fill. Indeed, construction of this sort was not even protection against prairie fires. Rather, recognizing

that it could no longer maintain control of the settlement by military force, the HBC chose to match growth in size and complexity of the settlement with growth in size and complexity of the fort.

In 1871 a small but important change took place in the fort, and it underscores the changing relationship of the HBC to the settlers. The retail store was made accessible from outside the fort whereas formerly it was necessary to enter the fort to reach the store. This change in accessibility was precipitated by the collapse of the fort wall in this location, but the collapse itself, after only 35 years of use, indicates clearly that the fort walls were built principally for their visual effect instead of their defensive capabilities. Also, the liquor store was located outside the south wall at this time. These changes are significant because even though the public still had access to the interior of the fort, the HBC was indicating its prerogative to deny access to its administrative compound and restrict its dealings with settlers to those of a formal, commercial nature. This statement of prerogative was essentially the same act that took place between 1846 and 1848 when the military garrison, requested by the HBC, controlled the larger part of the Upper Fort Garry compound and obliged settlers to conduct their business with the Company in a separate, walled-off area with its own entrance through the fort's east wall.

The dismantling of the fort in 1882 is widely attributed to the rapid growth of Winnipeg after the railway arrived in 1881, especially to the desire to straighten Main Street. It may be true that the southeast corner of the fort was in the way of a direct access to the bridge across the Assiniboine River, and it may be true that the external walls were deteriorating, but another interpretation can also be made. The fort had lost its symbolic value by this time due both to the rapid growth of Winnipeg after Manitoba joined Canadian Confederation and to the relocation of the economic center of Winnipeg to the north of the HBC reserve land. The emergence of a commercial and agricultural economy divorced from control by the HBC removed all possible claim the Company may have had to economic and social dominance. With its superior position gone there was no need to maintain the primary symbol of that position, and the fort was dismantled.

External Communication: Space

Construction of Upper Fort Garry at the geographic center of the Red River Settlement constituted a statement by the HBC that it intended to dominate the economic and social life of the settlement. The HBC was not alone, though, in its efforts to establish a presence at the heart of the settlement. The Catholic Church was the largest landowner in the settlement after the HBC. The church was established on its major block of property directly across the Red River from both Fort Douglas and Upper Fort Garry. In their physical opposition to each other, the HBC and the Church communicated very clearly to the settlement not only where the center of activity was located but also who the main players were in the economic and social life of the settlement and which constituencies they represented. The Catholic Church, located on the more heavily wooded and agriculturally poorer east bank of the river and representing the Métis, faced the HBC, located on the less heavily wooded and agriculturally more favored west bank and representing the English Protestant fur trade elite and the Scottish Presbyterian agrarian populace.

Internal Communication: Form

Buildings inside the fort were examined to see if any of their characteristics would permit a reliable distinction between residential and non-residential structures to be made. Only a tentative distinction could be made between the two types of structures. Exterior wall coverings on residential buildings were either horizontal clapboard or lath and plaster whereas non-residential buildings could have any of five outer coverings. Paint was always applied to residential buildings, and although non-residential buildings could be painted, they were outnumbered 2:1 by unpainted ones. Cellars were located under two of six residential structures—under the Chief Factor's house and the Governor's house—

but were not found in any of the 15 non-residential buildings. These modest results suggest that residential buildings tended to be painted horizontal clapboard or lath and plaster and that they may have an internal cellar. Non-residential buildings, by contrast, tended to have a wide variety of outer wall materials, to be unpainted, and not to have an internal cellar.

Internal Communication: Space

Figure 3 shows that buildings inside Upper Fort Garry are organized in relation to a primary longitudinal axis running from the midpoint of the north entrance to the equivalent point at the south entrance. The long axes of buildings inside the fort lie parallel to the primary axis and to the east or west of it (secondary axes) with some notable exceptions. A tertiary minor axis that could be considered an adjunct of the eastern secondary axis exists just inside the east wall. Each secondary longitudinal axis forms the centerline for a row of three buildings. The apparent lack of symmetry in the smaller sizes of buildings on the east secondary axis is compensated for by the presence of the tertiary/adjunct axis on that side. A balance is thus maintained. Two structures lie on the primary longitudinal axis—namely, the flagpole and the Governor's house. The spatial relation of these structures to each other, and the depiction of a road entering the fort from the north, indicate that the north gate is the main entrance. The Governor's house is the only building within the fort to have a long axis that is transverse to the primary longitudinal axis, thereby establishing the primary transverse axis. The establishment of this primary transverse axis focuses attention on the conceptual center of the fort compound, and the symbolic meaning of all other buildings must be viewed in relation to it.

The pattern indicated by the arrangement of buildings within the fort reflects a common organization of space based on a medieval European social matrix. This pattern is derived from, and still seen in, the Royal Court of England on non-religious ceremonial occasions, in houses of Parliament modelled along English lines, and in the seating of guests at a formal dinner. The Governor's house at Upper Fort Garry, at the intersection of the primary longitudinal and transverse axes, stands in the same position as a king or queen to his/her court, to the speaker, the monarch, or his/her representative in Parliament, and to the host at a formal dinner. Positions of honor or importance are found to the immediate right of the focal point, hence the colloquial phrases "right hand man" and "upper hand" meaning the right hand (Wildeblood 1973:97). The monarch's close relatives and trusted advisers in court stand to his/her right; the prime minister and his/her cabinet sits to the immediate right of the speaker's chair in Parliament, and further from the speaker's chair are the remaining government members; the guest of honor at a formal dinner is always seated on the right of the host (Cooke 1896:202; Post 1922:178–179, 211, 212; Raymond 1965:109–111). So at Upper Fort Garry the Recorder's house is to the immediate right of the Governor's house, and the Men's house is the next building along on the right. This pattern mirrors exactly the seating at a formal dinner with no hostess (Raymond 1965:111). On the left (west) secondary axis lie non-residential storage buildings. This position reflects the same secondary importance accorded to guests on the host's left at a formal dinner (Post 1922:179).

The social hierarchy of the HBC and the District of Assiniboia is thus reflected in the positioning of buildings at Upper Fort Garry in 1846. The Governor of Assiniboia, his family, and HBC officers lived in the Governor's house. The Recorder of Rupertsland, a quasi-judicial executive position in the government of Assiniboia held considerable power and was funded by the HBC, thus showing the dominant position, economically and physically, of the HBC in relation to "secular" government in the area. The Men's house was occupied by clerks and permanent employees (male) of the HBC.

Upon entering the fort, the visitor was immediately struck by a powerful symbolic message. The flag, as seen from ground level at the main entrance, flew above all buildings within the fort. Indeed, the flag itself contained a powerful mes-

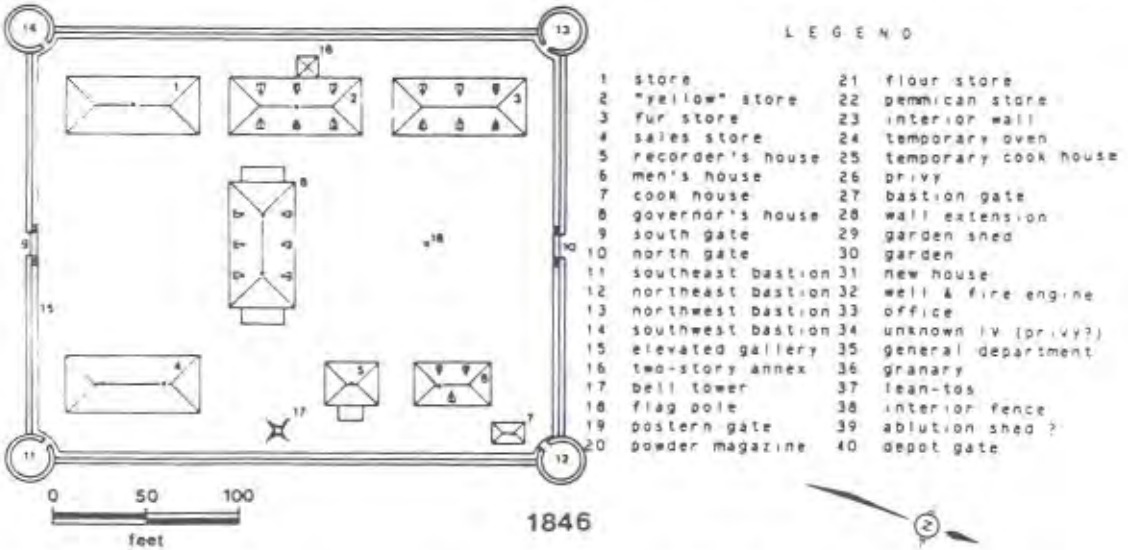

FIGURE 3. Plan of Upper Fort Garry in 1846 (after Loewen and Monks 1986: Fig. 1).

sage combining as it did the Red Ensign of Britain with the initials HBC in the lower right quadrant. Behind the flagpole stood the Governor's house in exactly the same position (the "upper hand") within the fort as the dais stood within the Great Hall of an English medieval castle or manor (Wildeblood 1973:55, 97). The judicial seat of Assiniboia confronted the visitor in the position of honor on the immediate right of the Governor's house, and the paid retainers and junior officers of the Company were housed to the visitor's immediate left in a position of secondary honor (Raymond 1965:111). To the visitor's right stood the basis of HBC authority, the storehouses for furs, food, and trade goods. Support buildings on the tertiary/adjunct axis were barely visible to the visitor, in the same position as serving personnel and the serving table at a formal dinner. Also noteworthy is the frequency of dormer windows that overlook the main courtyard. They provide a consistent roofline around the courtyard, an appearance of added height to the building of which they are a part, and they permit fort occupants symbolically to "look down on" fort visitors both economically and socially. This arrangement of buildings in relation to one another according to their functions and who lived in them, plus the impressive size and scrupulously observed orderliness of their orientation, indicated to visitor and resident alike that: (1) an hierarchical social organization existed, (2) the hierarchy was controlled by the HBC which was a representative of the crown, (3) the local governmental and judiciary apparatus was beholden to the HBC, (4) salaried employees and junior officers of the Company were of lower position than the recorder but of higher position than the vast majority of settlers, and (5) the HBC's well organized economic monopoly was safely under control.

Beyond symmetry, the internal form of the fort then expressed a highly developed social and economic organization. Unlike Fort Walsh, the highest ranks are not closest to the front gate (Murray 1985:Figure 22, 132ff.) but face the main gate across an open courtyard. Along the east secondary axis, the social position of building occupants decreases toward the front gate. Nevertheless, at Upper Fort Garry as at Fort Walsh, activities and associated structures are located in relation to the public entrance (Murray 1985:132ff.).

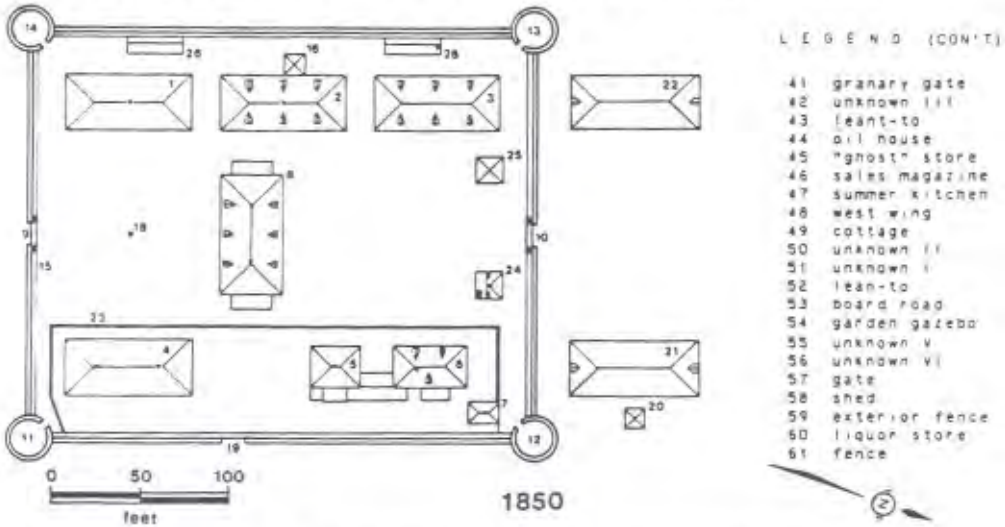

FIGURE 4. Plan of Upper Fort Garry in 1848 (after Loewen and Monks 1986: Fig. 6)

Figure 4 indicates that the principle of symmetry has been maintained, but the orientation of the fort has changed. The maintenance of symmetry has been achieved differently at this time, however, due to anomalous circumstances. The enclosure of the east side of the fort for use by the HBC was occasioned by the Sixth Regiment of Foot occupancy of the fort from October 1846 until August 1848. This garrison required that additional space and facilities be developed, hence the construction of an oven, a cookhouse, and ablution sheds for the military inside the fort. Outside, two large storehouses and a powder magazine were built by the HBC. Although symmetry on the secondary axes and the tertiary/adjunct axis transcended the fort walls, the balance of buildings and space was altered. The weight of buildings tended toward the east, despite the removal of the bell tower, whereas the weight of space tended toward the west in the larger military portion of the fort. It is particularly noteworthy that the orientation of the fort changed by this time without disrupting the established axes or the principle of symmetry. The removal of the flagpole to the center of the southern courtyard signalled this reorientation, and it directed attention to the south gate which overlooked the Forks, the main traffic intersection in the settlement. This reorientation maintained not only the principle of symmetry but also that of the orientation of buildings and activities in relation to the new main entrance. Major changes occurred, though, in the proximity of the Governor's house, now occupied by the officers of the Sixth Regiment, to the new main entrance, the redefinition of what was the public area (i.e., the HBC compound that could be entered only by the east gate), and the consequent distinction between what was a public entrance (the east gate—or postern—as it was called) and what was a main entrance (the south gate).

This reorientation of focus, yet maintenance of symmetry, indicates both the common ideological background of the military and the HBC and the lower-level cognitive distinctions between them. The common ideological background is reflected not only in the symmetry and orderliness of buildings (cf. Deetz 1977:39, 43), some of which already existed prior to the garrison and others of which were built to accommodate it, but also in the distribution of personnel among buildings. The military officers took over the Governor's house, thus placing them closer, albeit marginally, to the

new main (south) entrance than they would have been if the original orientation of the fort had been maintained. In this context, the military officers symbolically advance to a more prominent leadership position vis-à-vis the visitor entering the fort than was the case with the non-military Governor when the fort was first built. This positioning of the officers' quarters close to the main gate approximates the condition described by Murray (1985: Figure 22) at Fort Walsh. The means by which leadership is effected in the military as opposed to the civilian realm seems to be reflected in this reorientation of the fort. The act of "receiving" guests was implied by the original orientation of the fort, but the act of confronting intruders and/or leading troops was implied by its reorientation under the military.

Even if one were to argue that practical necessity dictated the construction of storehouses outside the fort, near a main gate, and away from the flood-prone and unstable riverbank, the reorientation of the fort's focus from north to south could not be explained. Visitors could still pass through the north gate and be confronted by the original impressive spectacle. Temporary cookhouses and ovens could have been built south of the Governor's house, and troops could have been housed in any combination of extant buildings along the west wall. Domination of the critical transportation junction formed by the Red and Assiniboine confluence effectively meant control of the movement of goods, people, and information within the settlement. The military interpretation of this exercise lay directly behind the reorientation of the fort.

The common right/left theme of the HBC and the military is maintained after reorientation. The Governor's house is still the focal point of the compound, but now in a military context closer to the new main entrance. The central and southwestern storehouses, those immediately to the right of the officers, were refitted as troop barracks. No information is available on the distribution of ranks of enlisted men among the barracks, only that sergeants' rooms were walled off (HBCA 1846), presumably because many had brought their wives and children (PRO 1847). The northwestern storehouse was designated as a barrack and commissariat (PRO 1846a), its support function like those of the cookhouse and oven being indicated by its position to the rear of the officers' quarters. By contrast, the HBC enclosure lay to the left of the officers' residence, an indication of the Company's subordinate position in relation to the state as represented by the military.

Within the HBC enclosure the symmetry and organizational characteristics of the fort as a whole break down. The models provided by the medieval Great Halls, the House of Parliament, and the formal dinner cannot be applied because of the anomalous circumstances engendered by the Company itself in requesting a garrison of troops. It is worth noting in this connection that the Recorder was housed outside the fort beginning in 1848 (Loewen and Monks 1986:67). His house was given over to senior HBC personnel at that point. In sum, the HBC relinquished its political and social dominance in the Red River Settlement to the military garrison it had requested. In so doing, the Company relinquished the symmetry and organization of its buildings to the military which reorganized the symbols of authority according to military rather than civilian precepts. This reorganization shifted the focus of the fort to the south, where it subsequently stayed, while at the same time it preserved the overall organization, symmetry, and concepts of left and right that the military shared with the HBC.

Figure 5 shows clearly the lasting effect of the 1846–1848 military garrison in terms of the southward orientation of the fort. Doubling of the fort's length and construction of new buildings was accomplished according to the same principles of symmetry as noted above. It is noteworthy that the bulk of new construction lay at right angles to the primary longitudinal axis, thus establishing at least two more transverse axes. How to label these axes becomes a problem that may reflect a diffusion of focus within the fort. The primary transverse axis is still indicated by the building now known as the "front house" (the old Governor's house). A second major transverse axis is indicated by the "new house" in which the Governor of Assiniboia now lived with his family. This house, however, faces the new bastion (north) gate, thus promoting an

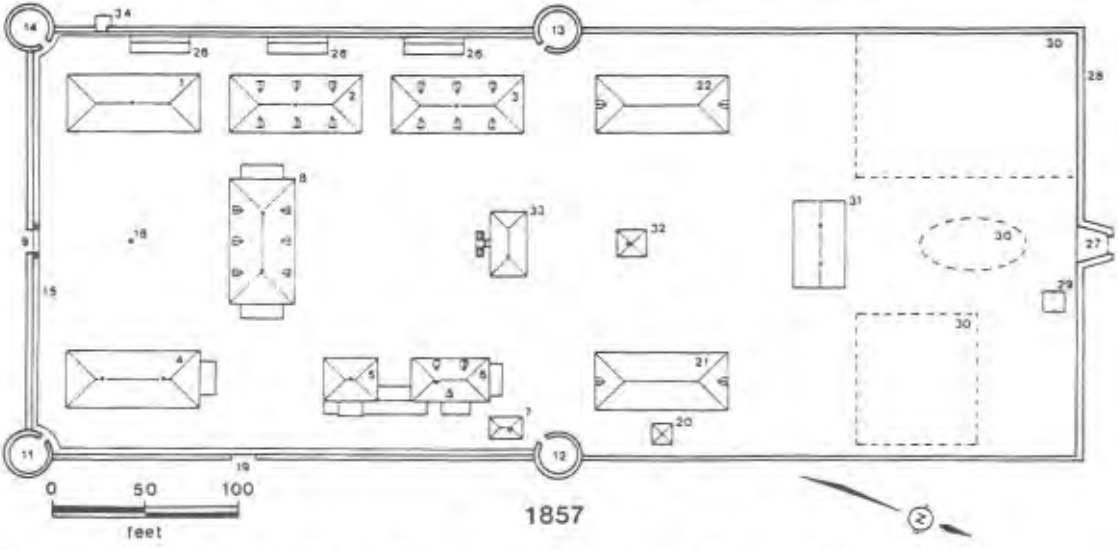

FIGURE 5. Plan of Upper Fort Garry in 1857 (after Loewen and Monks 1986: Fig. 14).

orientation that faces in the opposite direction from the other buildings in the compound. A third transverse axis is indicated by the "office" in which the HBC's business was conducted. Like the front house, it faces south. The well, located between the office and the new house, reinforces the importance of the primary longitudinal axis but does not establish another transverse axis.

The diffusion of focus within the fort by 1857 was a signal that the political and economic systems of the Red River Settlement were beginning to diverge. The enlargement of the fort in 1853 provided enough space for these two important aspects of the HBC's operation to be made physically manifest. Internal differentiation and specialization within the fort indicated that an evolutionary process was at work throughout the Red River Settlement. The profitability of the bison hunts had by this time become severely reduced, on the one hand, while on the other the opportunities offered by free trade entrepreneurship and sedentary agriculture in the settlement were associated with a continued growth of population and social and economic differentiation within it (Monks 1985:408). Also, with the extension of the American railhead to the Mississippi River in 1854, the assumption of York Factory's entrepôt role by Upper Fort Garry necessitated a greater separation of economic and other functions than was previously the case. The HBC symbolically indicated its intent to lead the economic and social differentiation of the settlement in these circumstances by expanding the fort differentiating its internal foci.

Figure 6 shows how this diffusion of focus was resolved; namely, by creating an internal division—i.e., a fence—that separated the social and political compound at the north end from the economic compound in the south. The proportions of the fort's internal area are revealing. The economic activities received far more space than the social and political activities, and this symbolized their relative importance from the HBC's point of view. The Company still ruled—this was the intended message, despite the economic reality in the settlement at the time.

Further, a continuation of the medieval Great Hall model is still evident in the northern compound. Significantly, the flagpole is now situated in front of the Governor's house, the latter stand-

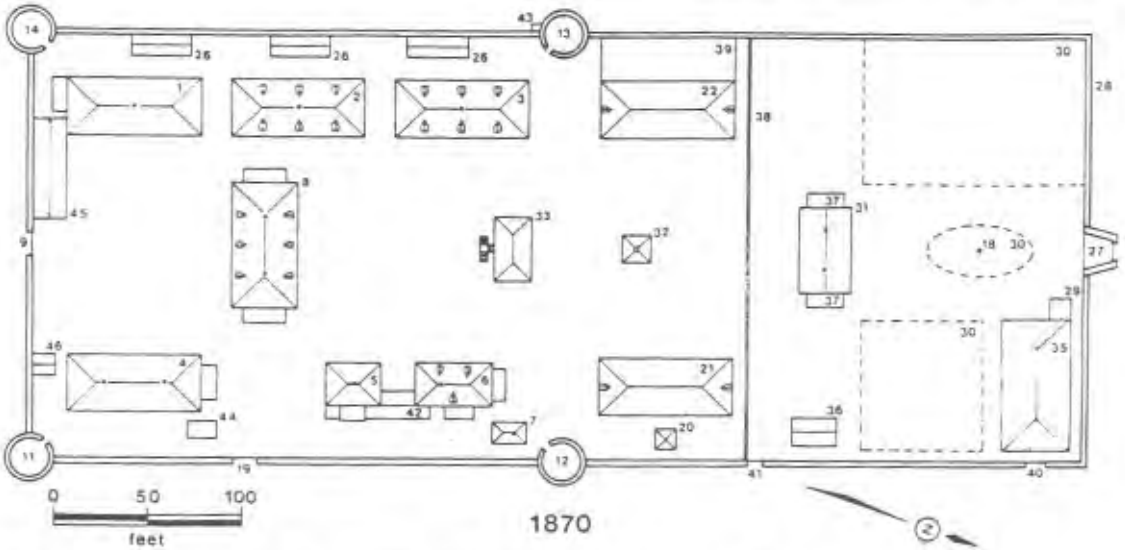

FIGURE 6. Plan of Upper Fort Garry in 1870 (after Loewen and Monks 1986, Fig. 23).

ing in the position of honor—the "upper hand"—in the center of the wall facing the bastion gate. A degree of symmetry is maintained in this compound, particularly in the layout of garden space and the approach to the Governor's house. The addition of Company buildings to this compound destroyed the intended symmetry, and it symbolized the primacy of economic factors over social and political ones. It is noteworthy, though, that out of deference to the social and political leader the HBC placed gates in the east fort wall near the two buildings in question so that Company business could be conducted with minimal disturbance to compound residents.

In the larger southern compound, the construction of new buildings and additions to existing buildings tended to obscure the former balance and symmetry. The additional construction, though, took place around the perimeter of the compound, leaving the primary longitudinal axis and its surrounding space relatively uncluttered.

The HBC compound, with its additional peripheral construction but without its flagpole, communicated via its buildings that economic function was of prime importance here now that social and political functions were being handled in the northern compound. Indeed, the same message is imparted by the unequal partitioning of the fort's interior. Only the central axis remained uncluttered, thus continuing to indicate that an hierarchical organization still was much in evidence within the economic sector despite the exigencies that the HBC currently faced. The Great Hall model still applies to the HBC compound, but the emphasis on different components of the economic system has changed. With the social functions of the fort centered in the north compound, the economic primacy of activities in the southern compound became evident. To the right (west) of the HBC offices stood the stores (warehouses) for incoming and outgoing commercial goods. The economic activities based on these goods still formed the basis of the HBC's position in the settlement and thus were placed in the positions of honor. To the left of the offices were residences and the retail store. HBC personnel and retail sales to settlers were clearly accorded less importance than the large HBC enterprise, a departure from the situation when the fort was first built.

Figure 7 shows some very significant changes in

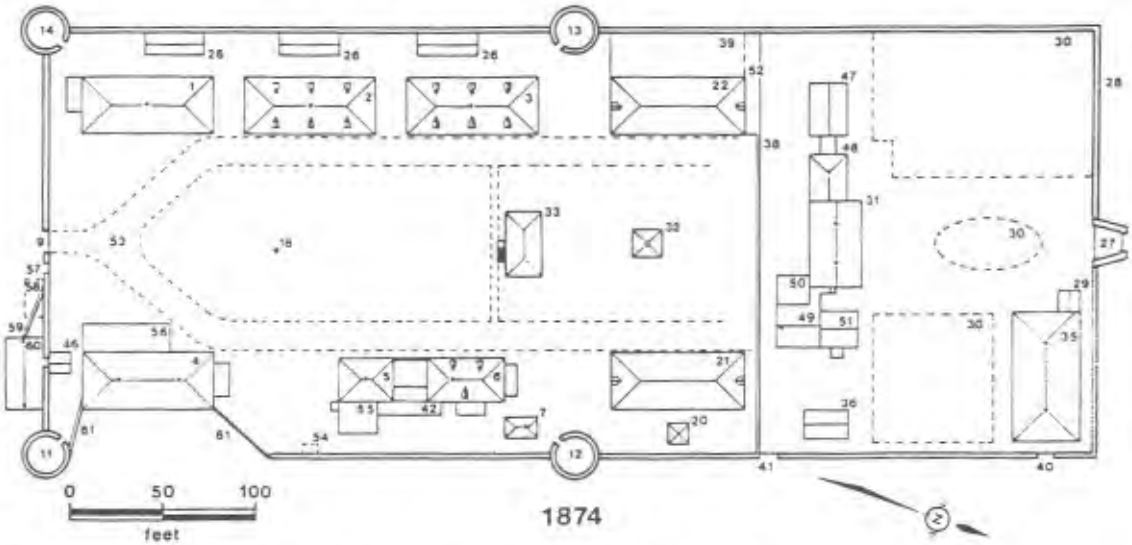

FIGURE 7. Plan of Upper Fort Garry in 1874 (after Loewen and Monks 1986: Fig. 28).

both compounds of the fort. Even more importantly, the Company made its retail sales outlets, the sales shop and the liquor store, available from outside the fort. This development implicitly communicated the Company's right to deny public access to its inner compound. In addition, this development symbolized the Company's first steps in altering its business strategy by taking its retail activity to the community instead of requiring the community to come to it. Also, increased specialization in the division of labor within the HBC is indicated, and this evolutionary growth parallels developments in the settlement at large.

Inside the HBC compound, the most obvious change involved the removal of the front house and the temporary warehouse on the south wall to the west of the main entrance. This uncluttering of the compound clearly restored the original model of the Great Hall now that the HBC offices presided over the central area of the compound in the "upper hand" position. To reinforce this model of domination, the flagpole was removed from the Governor's compound and placed before the HBC offices. Also, the installation of a carriageway along each row of buildings on the secondary longitudinal axes re-established organization and symmetry in the HBC operations and divided the Company's offices and officers' residence from the remainder of the buildings. This reaffirmation of the Great Hall model was the HBC's final attempt to assert its position subsequent to Manitoba joining Canada and Winnipeg being incorporated as a city.

The expansion of buildings in the Governor's compound conformed to the pattern consistently seen elsewhere in the fort's history, and the growth in the number and diversity of buildings indicated clearly that social and political diversification was occurring and was being supported in the Red River Settlement. Also, as noted above, the two compounds within the fort are not only completely separate from one another but also stood back to back. This positioning mirrors the growth and diversity in the settlement itself and signals that the role of the HBC in determining the social and political elite of the settlement was becoming less influential. Further evidence of this fact is seen in the restriction of secondary and tertiary longitudinal axes to the HBC compound. There was no transmural continuity of axes except for the pri-

mary one, and even then, the main buildings all sat transversely on it, thus creating a potential for its segmentation.

The old pattern to which the additional buildings in the Governor's compound adhere is the right/left dichotomy. The newer buildings to the right of the Governor's house were residential buildings, added to accommodate the additional social and political elite personnel and their guests. Within these additions there is yet another division between front and back in relation to the transverse axis running the length of the Governor's house. The more prestigious individuals occupied the front building while those of lower position occupied the rear one. To the left of the Governor's house were added a west wing (function unknown), a passageway, and a summer kitchen. The annexes of known function were thus nonresidential, and they were not differentiated into front and rear as were the buildings on the right. Nothing definitive can be said about the west wing due to lack of information.

Summary

It was suggested at the outset of this article that Upper Fort Garry functioned as a vehicle of nonverbal communication employed by the HBC to assert and maintain its economic and social dominance within the Red River Settlement. The location, and to a small extent, the construction methods of buildings inside the fort are seen as elements of non-verbal communication designed to reflect and reinforce the quasi-military organization of the HBC and the functions of different buildings. The internal and external appearance of the fort are seen as signals to a diverse audience of target populations with whom the HBC interacted and over whom it wished to maintain economic and social dominance. The changes through time that one observes in the architectural organization of the fort are seen not just as reflections of changes in the internal and external economic and social organization of the HBC and the settlement but also as active ingredients in the effort by the HBC to promote and maintain its position in these relations.

An examination of the internal spatial organization of Upper Fort Garry reveals evidence of both continuity and change. Continuity is perceived at a relatively deep, unconscious level. The Great Hall model, with its right/left symbolism persists throughout the fort's history and was also employed at a number of other HBC installations in the Northern Department, e.g., Fort St. John (Fladmark 1985:56–58; Figure 4). This model requires symmetry, a high degree of organization, and repetitiveness for its symbolism to be expressed. Once the requisite conditions are met, as in Upper Fort Garry, the messages of order, control, and dominance are unmistakable. The principles enunciated by Murray (1985:132ff.) of symmetry, organization, and the direct correlation between rank and location within the compound are clearly expressed in this case as well. Unlike Fort Walsh, the highest ranking individuals occupy buildings facing, but furthest from, the main entrance to their compound. The exception to this rule is found in the military garrison of 1846–1848 which, like the North West Mounted Police, emphasized the leadership role of their elite in the positioning of their quarters. Thus the juxtaposition of "frontness," symbolizing leadership and confrontation, in a military context versus "backness," symbolizing control and reception, in a civilian context still occurs within a commonly held concept of "leftness" (lesser value) and "rightness" (greater value).

The changes that occur through time inside Upper Fort Garry are of a more conscious, superficial sort. The orientation of the fort shifts from the settlement to the river; the HBC defers to the military but controls the political institutions within the settlement; the political and social aspects of the settlement begin to exist independently of the HBC's economic interests by the later stages of the fort's occupancy; the HBC simultaneously appropriated the right to restrict public access to its compound and moved its major retail outlets beyond the confines of the fort compound. Buildings come and go as necessity dictates, but they do so within a consistent pattern that symbolizes the HBC's intent to dominate the economic and social life of the settlement despite the exigencies of the moment.

The analysis of Upper Fort Garry has shown that architecture was used to communicate to both external and internal audiences and that this communication was achieved through both building form and the organization of space. Growth over time in the fort's size and internal complexity proceeded simultaneously with growth in the settlement's size and economic and social complexity. These findings are consistent with the suggestion that structural investment in the symbolic function of architecture increases in response to greater social differentiation (McGuire and Schiffer 1983:281–283). The lag effect between social inequality and architectural design noted by McGuire and Schiffer (1983:283) may be accounted for in the differences in permanence between fixed, semi-fixed, and non-fixed feature elements. Non-fixed feature elements—i.e., behavior—are most easily altered in response to economic and social variation over time. Semi-fixed feature elements are alterable, but the investment of time, effort, and capital is greater than in the case of non-fixed feature elements so changes are generally more "costly" and therefore slower. Slowest of all are changes in fixed feature elements—i.e., buildings and their locations—because their cost is relatively high.

Conclusion

Papers such as this are vulnerable to the criticism that there is no way to demonstrate objectively that architecture, or any other class of artifact, had any symbolic value and cultural meaning as claimed here. The informants are long dead, there is no means of knowing how widely recognized were the symbolic messages embodied in the fort's architecture, and the documents that do contain indirect indicators of the relationship between architecture and meaning are biased, inconsistent, and/or incomplete. Nevertheless, examination of the form and spatial organization of the fort's architectural components from the perspective of inside and outside audiences has revealed a consistently plausible explanation of the empirical world in terms of non-verbal communication theory. This consistent plausibility results from the redundancy of visual cues (Rapoport 1982:51) and is the key to perceiving the non-verbal messages of symbolic communication (McGuire and Schiffer 1983:297; Fritz 1987:317). Without its applicability to form and space, to internal and external communication, and to all points in the fort's history, the validity of the non-verbal communication approach would be diminished.

Architecture, like documents, clothes, food, or tools, is a source of encoded cultural information. While much attention has been devoted by archaeologists to understanding such things as the ecological basis for settlement patterning, little energy has been expended on understanding the cultural messages of architecture. This article follows the lead of Deetz (1977), Leone (1973, 1977), Fritz (1978, 1987), McGuire and Schiffer (1983), Culpin and Borjes (1981), Murray (1985), and Rapoport (1982) by attempting to understand these messages. Studies such as this one can be used as models for archaeological studies where little or no documentary evidence is available. Knowing that differences and relationships between structural features and the materials they contain may have symbolic implications will enable researchers to develop a wider range of potential interpretations of their data than is often the case at present (Rapoport 1982:90–92; Leone 1982:757). Also, using studies such as this as analogues will help increase the likelihood that interpretations of data that lack historical documentation are accurate. Further studies on the symbolism and non-verbal communication of material remains should reveal much about past cultures that cannot be discovered using currently dominant paradigms.

ACKNOWLEDGMENTS

The author wishes to thank the Social Sciences and Humanities Research Council of Canada for financial support (grants #410-84-0454 and 410-85-1093) of the research from which this paper was derived. Brad Loewen (Winnipeg), David Shanahan (Ottawa), and Dr. E. P. Stanton (Kew) conducted the archival research, and lengthy discussions with Mr. Loewen contributed greatly to the crystallization of some ideas presented here. Ear-

lier versions of the paper were read by Ken Hughes, Georg Lithman, Mark Leone, John Fritz, and three anonymous reviewers, and deep appreciation is expressed for their helpful critiques. Thanks to Mike Kelly and Luke Dalla Bona for the line drawings. The author assumes full responsibility for any errors, oversights, or misinterpretations contained herein.

REFERENCES

BROWN, JENNIFER
1980 *Strangers in Blood: Fur Trade Company Families in Indian Country*. University of British Columbia Press, Vancouver.

COOKE, MAUD C.
1896 *Social Etiquette: Or, Manners and Customs of Polite Society*. McDermid and Logan, London, Ontario. Microform.

CROSS, MICHAEL C.
1970 *The Frontier Thesis and the Canadas: The Debate on the Impact of the Canadian Environment*. Copp Clark, Toronto.

CULPIN, M. S., AND R. BORJES
1981 The Architecture of Fort Union: A Symbol of Dominance. In *Rendezvous: Papers of the Fourth North American Fur Trade Conference*, edited by T. C. Bradley, pp. 135–140. The North American Fur Trade Conference, St. Paul.

DEETZ, JAMES
1977 *In Small Things Forgotten: The Archaeology of Early American Life*. Anchor Press/Doubleday, New York.

FLADMARK, KNUT R.
1985 Early Fur Trade Posts of the Peace River Area of British Columbia. *B. C. Studies* 65:48–65. Vancouver.

FRITZ, JOHN M.
1978 Paleopsychology Today: Ideational Systems and Human Adaptation in Prehistory. In *Social Archaeology: Beyond Subsistence and Dating*, edited by C. L. Redman, E. Curtin, N. Vergassie, and J. Wanser, pp. 37–59. Academic Press, New York.
1987 Chaco Canyon and Vijayanagara: Proposing Spatial Meaning in Two Societies. In *Mirror and Metaphor*, edited by D. Ingersoll and G. Bronitsky, pp.314–349. University Press of America, Lanham.

GUINN, ROGER
1980 The Red–Assiniboine Junction: A Land Use and Structural History, 1770–1980. *Parks Canada Manuscript Report Series* No. 355. Environment Canada, Ottawa.

GUNN, DONALD, AND CHARLES R. TUTTLE
1880 *History of Manitoba: From the Earliest Settlement to 1835, by the Late Honorable Donald Gunn; and from 1835 to the Admission of the Province into the Dominion, by Charles R. Tuttle*. Maclean, Roger, Ottawa.

HARGRAVE, JOHN J.
1977 *Red River*. Friesen, Altona.

HUDSON'S BAY COMPANY ARCHIVES (HBCA)
1846 *Governor George Simpson Correspondence Inward*. D.5/18, fo.81. Provincial Archives of Manitoba, Winnipeg.
1848 *Governor George Simpson Correspondence Outward (General)*. D.4/69. Provincial Archives of Manitoba, Winnipeg.

JUDD, CAROL
1980 Native Labor and Social Stratification in the Hudson's Bay Company's Northern Department (1770–1870). *The Canadian Review of Sociology and Anthropology* 17(4):305–314.

LEONE, MARK P.
1973 Archaeology as the Science of Technology; Mormon Town Plans and Fences. In *Research and Theory in Current Archaeology*, edited by C. L. Redman, pp. 125–150. John Wiley and Sons, New York.
1977 The New Mormon Temple in Washington, D.C. In Historical Archaeology and the Importance of Material Things, edited by L. Ferguson. *Special Publication Series* No. 2:43–61. Society for Historical Archaeology, California, Pennsylvania.
1982 Some Opinons About Recovering Mind. *American Antiquity* 47(4):742–760.

LIVERMORE, CAROL
1976 Lower Fort Garry, the Fur Trade, and the Settlement at Red River. *Parks Canada Manuscript Report Series* No. 202. Environment Canada, Ottawa.

LOEWEN, BRADLEY, AND GREGORY G. MONKS
1986 A History of Structures at Upper Fort Garry, Winnipeg, 1835–1887. *Microfiche Report Series* No. 330. Canadian Parks Service, Ottawa.
1988 Visual Depictions of Upper Fort Garry. *Prairie Forum* 13(1):1–24.

MCGUIRE, RANDALL H., AND MICHAEL B. SCHIFFER
1983 A Theory of Architectural Design. *Journal of Anthropological Archaeology* 2:277–303.

MONKS, GREGORY G.
1982 Preliminary Report on Archaeological Investigations in Bonnycastle Park, 1981. *Manitoba Archaeological Quarterly* 6(3):46–61.
1983 Preliminary Report on Archaeological Investigations in Bonnycastle Park (Upper Fort Garry), 1982. *Manitoba Archaeological Quarterly* 7(4):3–29.

1984 Preliminary Report on Excavations at Upper Fort Garry. *Manitoba Archaeological Quarterly* 8(3–4): 30–50.

1985 Status and the Fur Trade in the Northern Department, 1821–1870. In *Status, Structure, and Stratification: Current Archaeological Reconstructions*, edited by M. Thompson, M. T. Garcia, and F. J. Kense, pp. 407–412. The Archaeological Association of the University of Calgary, Calgary.

MORTON, WILLIAM L.
1957 *Manitoba: A History*. University of Toronto Press, Toronto.

MURRAY, JEFFERY S.
1985 Social Relations and the Built Environment: Archaeological Reconstructions of Cultural Ideologies. Unpublished M. A. thesis, Department of Anthropology, University of Alberta, Edmonton.

PANNEKOEK, FRITS
1987 The Fur Trade and Western Canadian Society, 1670–1870. *Canadian Historical Association, Historical Booklet* No. 43. Ottawa.

POST, EMILY
1922 *Etiquette: In Society, in Business, in Politics, and at Home*. Funk and Wagnalls, New York.

PROVINCIAL ARCHIVES OF MANITOBA (PAM)
1822 *Pelly Documents, Letter to George Simpson, 8 March 1822*. MG2, A5, fos. 16 &17. Provincial Archives of Manitoba, Winnipeg.

PUBLIC RECORDS OFFICE (PRO)
1846a *Relative Sketch of Upper Fort Garry, Red River Settlement*. MP 1/735, 84129. Public Records Office. Kew, Surrey, England.

1846b *Disembarkation Return of the Troops Arrived at Fort Garry from Fort York [Hudson's Bay]*. WO 1/557, 80356. Public Records Office. Kew, Surrey, England.

1847 *Sixth Regiment of Foot, Monthly Return, Upper Fort Garry, April 1847*. WO 17/594, 82369. Public Records Office. Kew, Surrey, England.

RAPOPORT, ANATOL
1982 *The Meaning of the Built Environment: A Nonverbal Communication Approach*. Sage, Beverly Hills, California.

RAYMOND, LOUISE
1965 *Good Housekeeping's Book of Today's Etiquette*. Harper and Row, New York.

ROSS, ALEXANDER
1957 *The Red River Settlement*. Ross and Haines, Minneapolis.

VAN KIRK, SYLVIA
1980 *Many Tender Ties: Women in Fur Trade Society in Western Canada*. Watson and Dwyer, Winnipeg.

WATSON, R.
1928 *Lower Fort Garry: A History of the Stone Fort*. Hudson's Bay Company, Winnipeg.

WILDEBLOOD, J.
1973 *The Polite World: A Guide to the Deportment of the English in Former Times*. Second edition. Davis-Poynter, London.

GREGORY G. MONKS
DEPARTMENT OF ANTHROPOLOGY
UNIVERSITY OF MANITOBA
WINNIPEG, MANITOBA
CANADA R3T 2N2